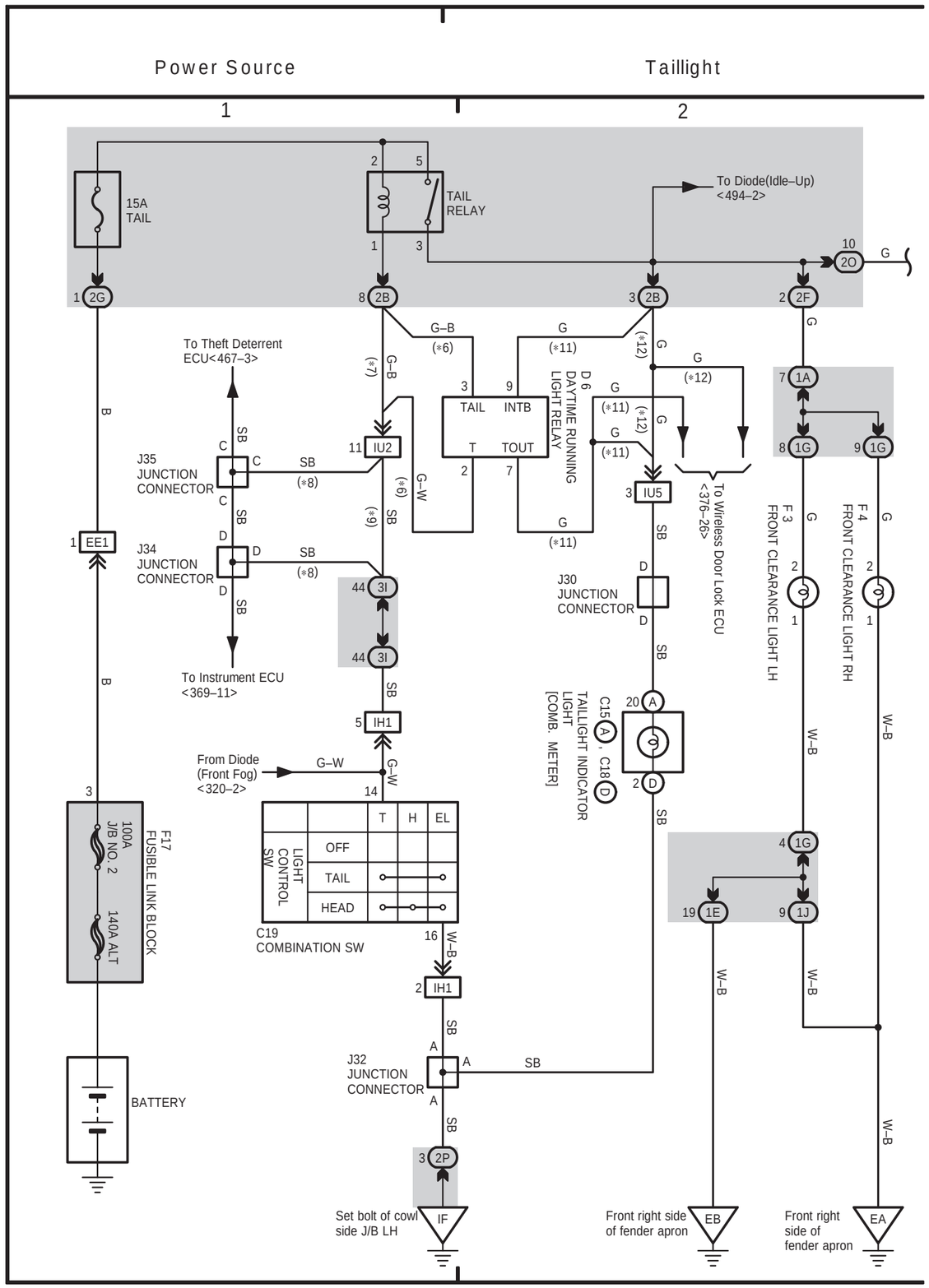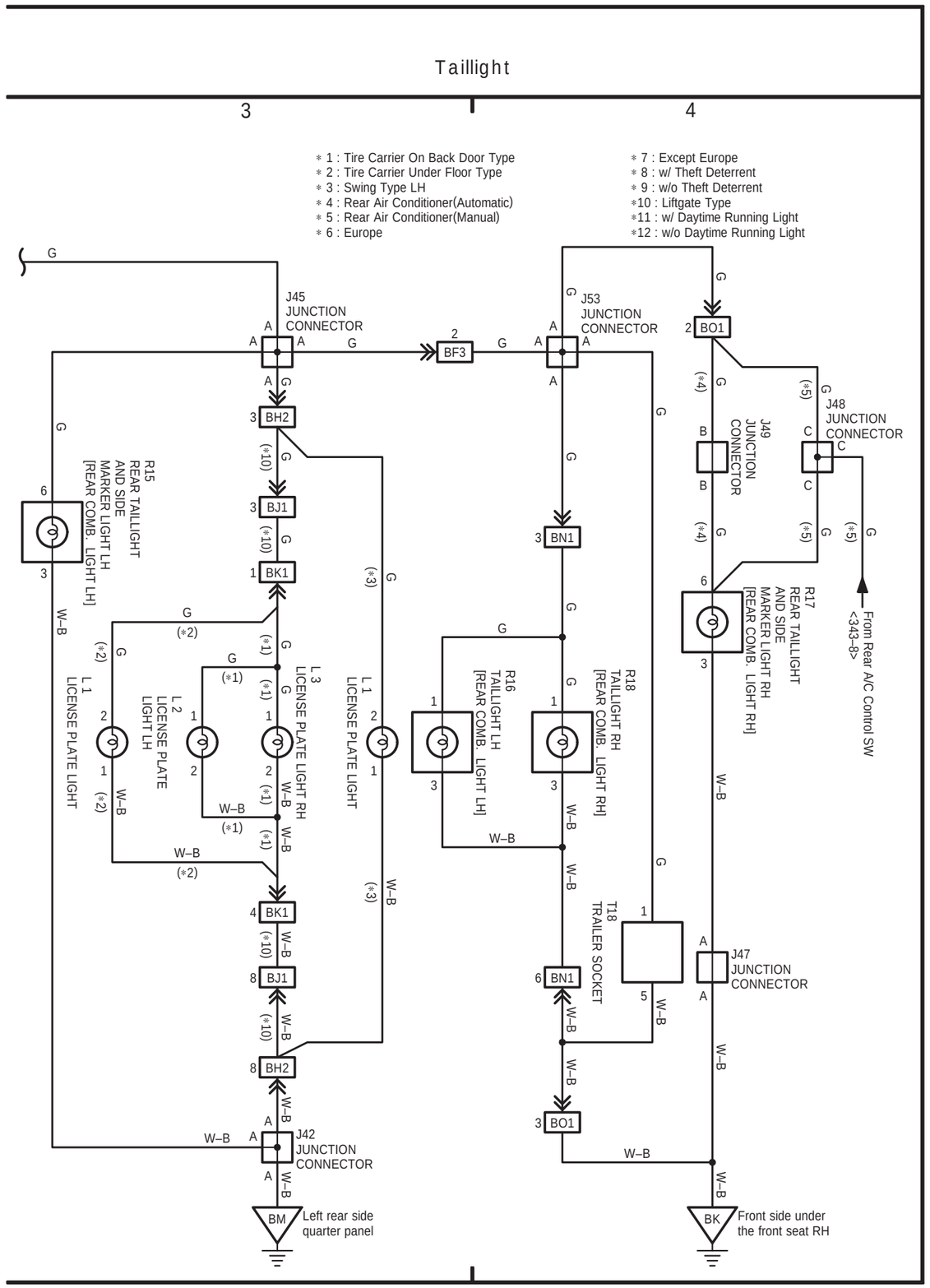F ELECTRICAL WIRING DIAGRAM (System Circuits)