F ELECTRICAL WIRING DIAGRAM (System Circuits)

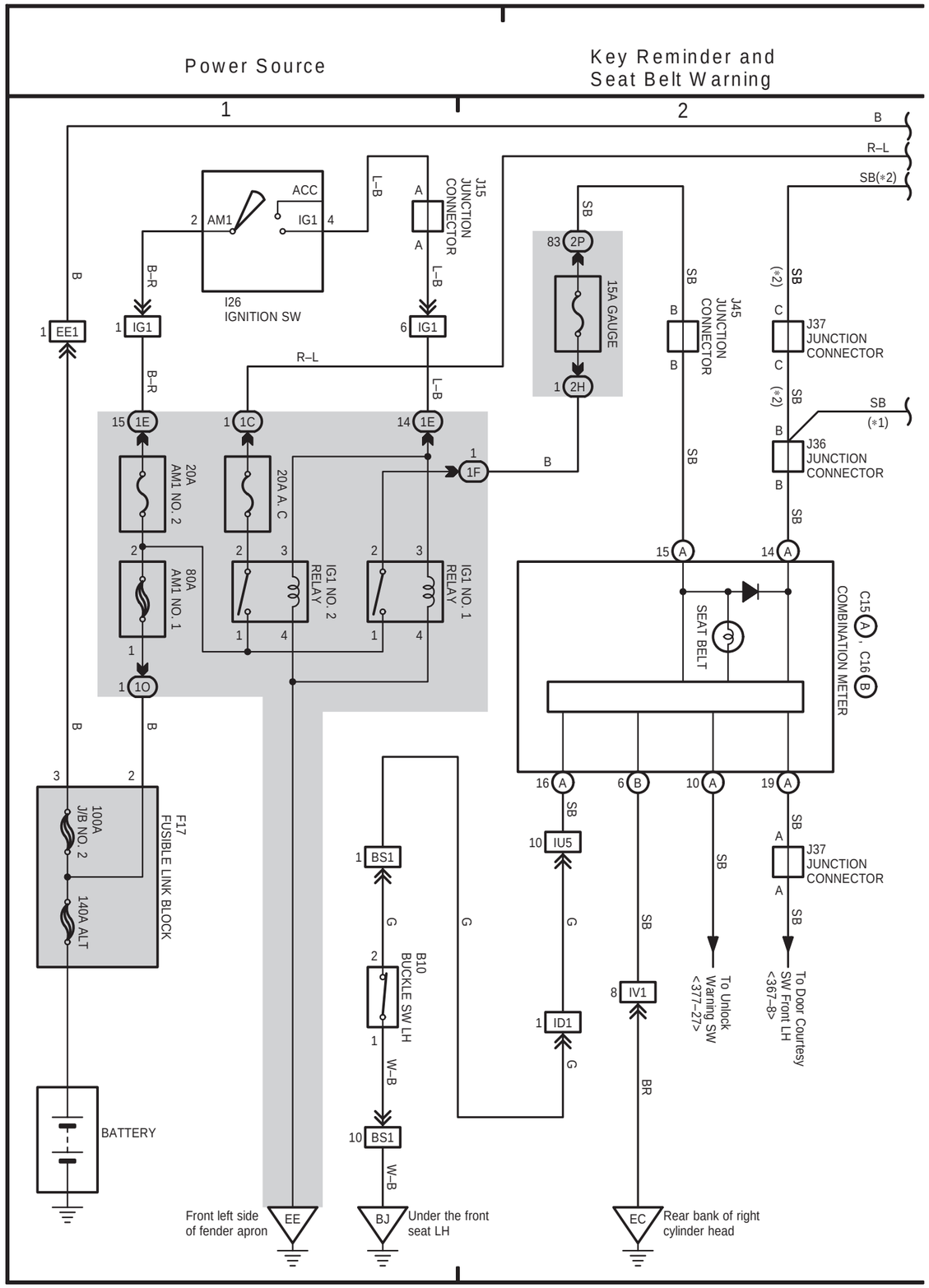

500

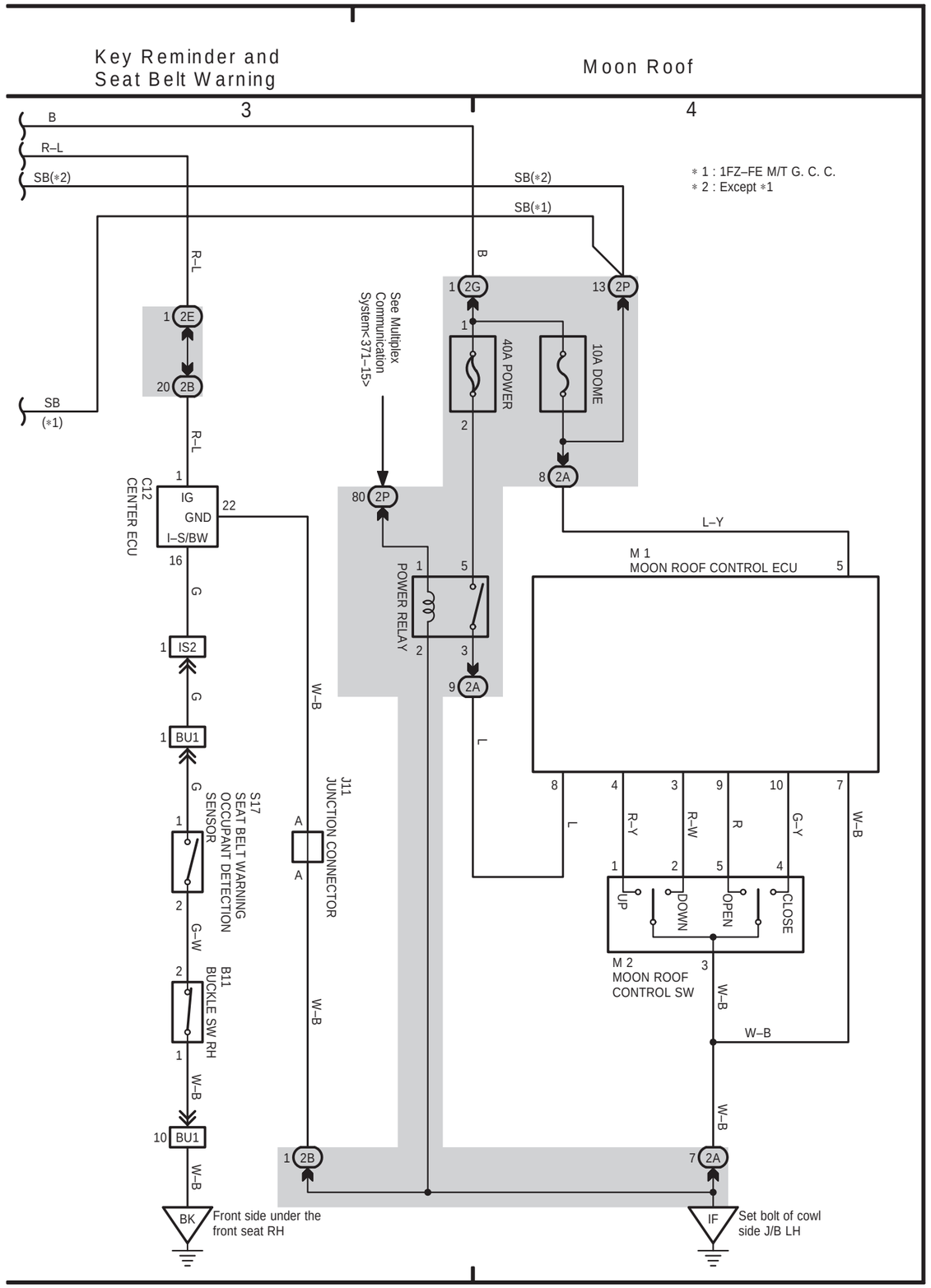

501

LAND CRUISER Station Wagon (EWD342F)