# F ELECTRICAL WIRING DIAGRAM (System Circuits)

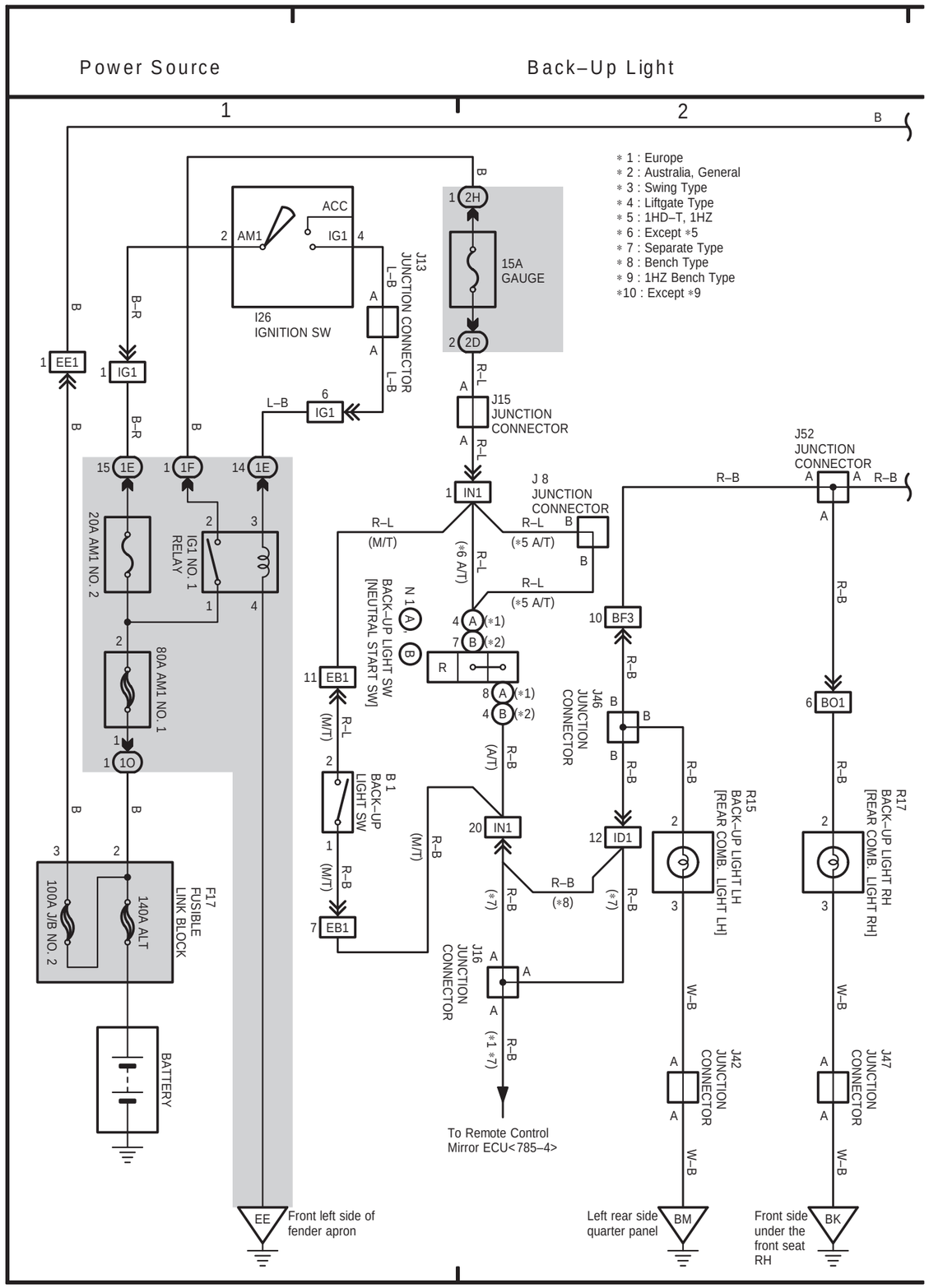


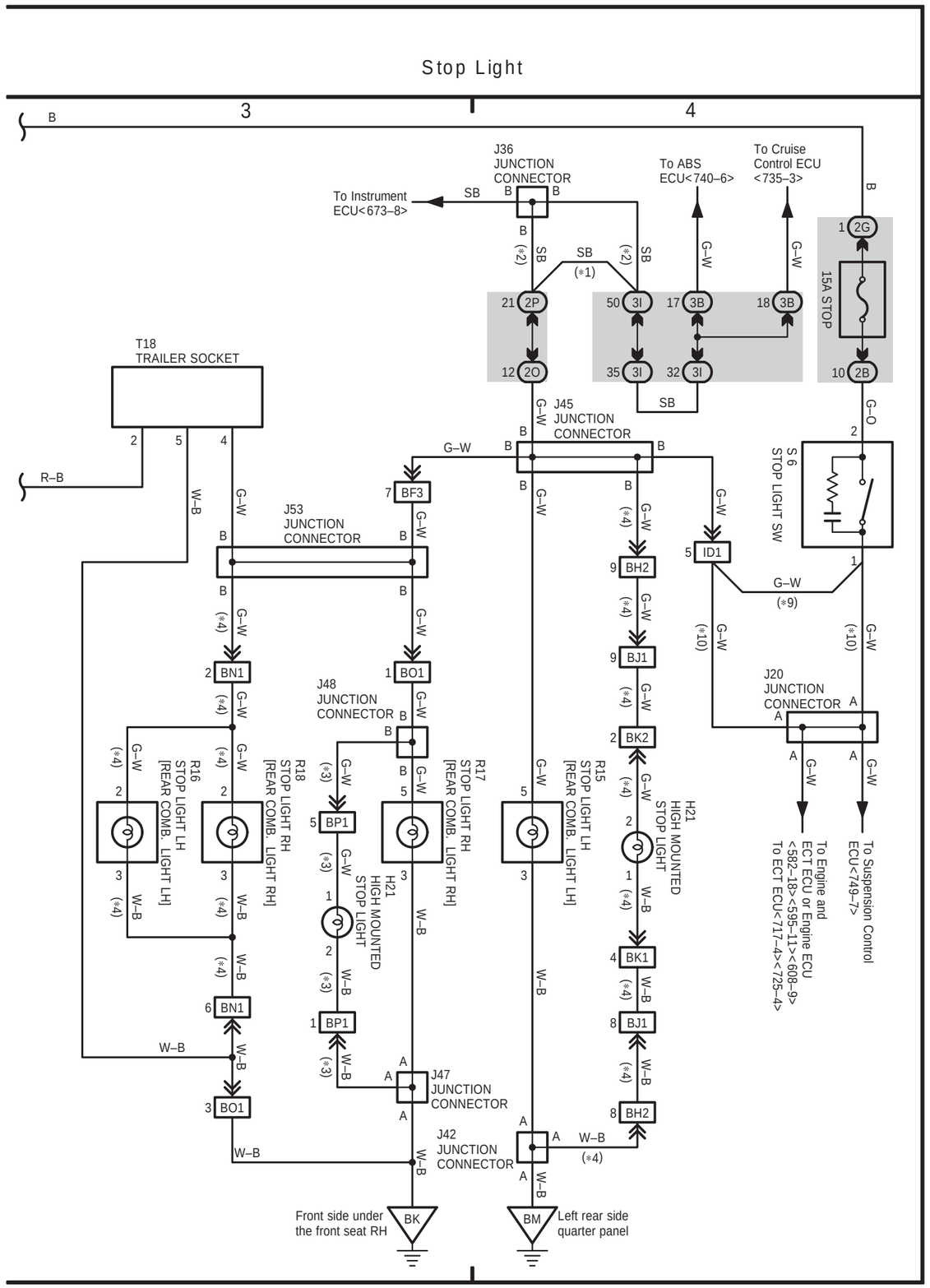


RHD





RHD



LAND CRUISER Station Wagon (EWD342F)