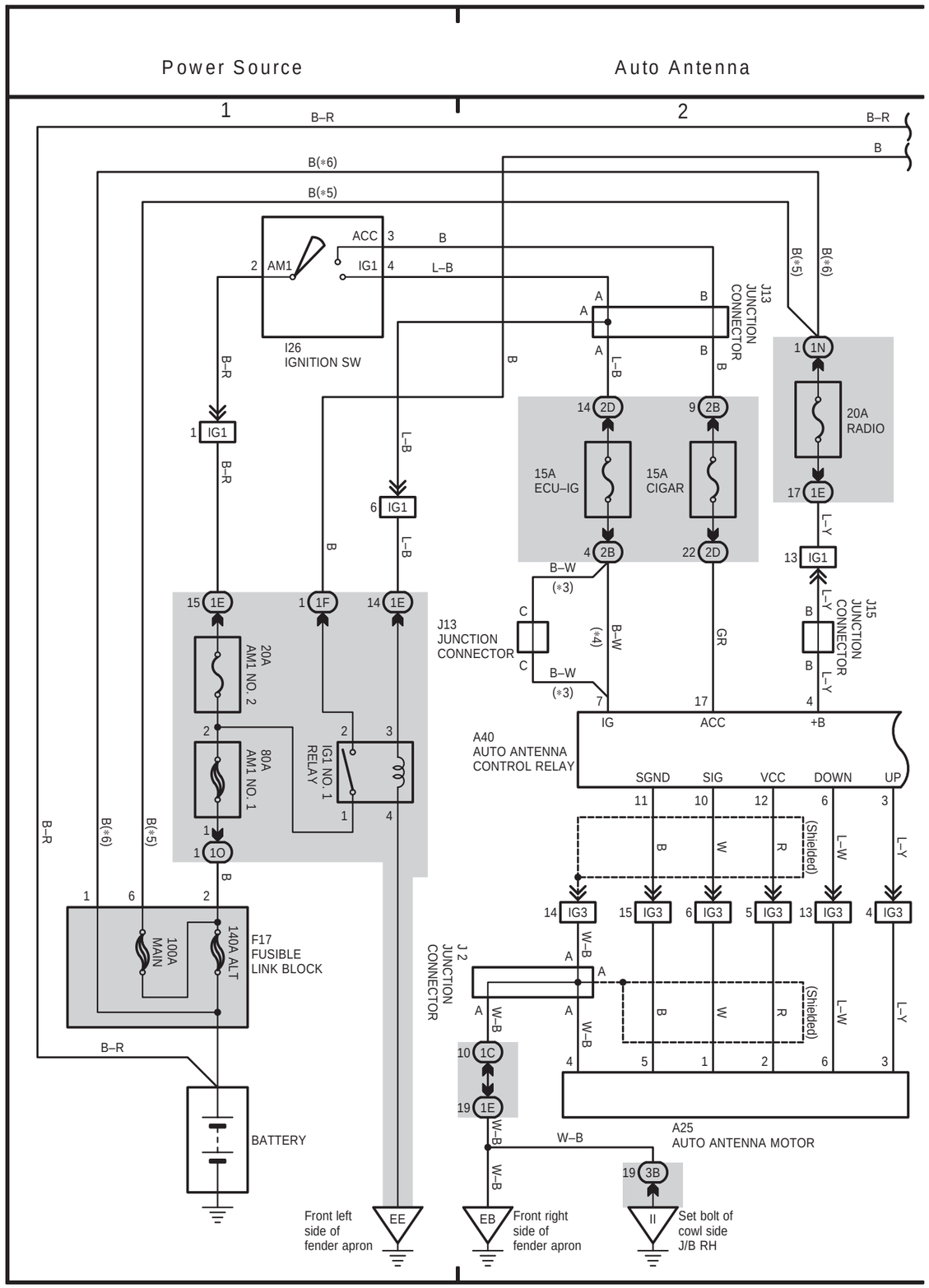
Power Source
Auto Antenna
1
2
B–R
B(*6)
B(*5)
B
ACC
IG1
AM1
I26
IGNITION SW
J13
JUNCTION
CONNECTOR
1N
20A
RADIO
1E
L–Y
IG1
15A
ECU–IG
15A
CIGAR
2D
2B
B–W
(*3)
(*4)
GR
J15
JUNCTION
CONNECTOR
20A
AM1 NO. 2
80A
AM1 NO. 1
IG1 NO. 1
RELAY
1F
1O
F17
FUSIBLE
LINK BLOCK
100A
MAIN
140A ALT
BATTERY
A40
AUTO ANTENNA
CONTROL RELAY
IG
ACC
+B
SGND
SIG
VCC
DOWN
UP
(Shielded)
IG3
W–B
W
R
L–W
J2
JUNCTION
CONNECTOR
1C
3B
A25
AUTO ANTENNA MOTOR
Front left
side of
fender apron
EE
EB
Front right
side of
fender apron
II
Set bolt of
cowl side
J/B RH





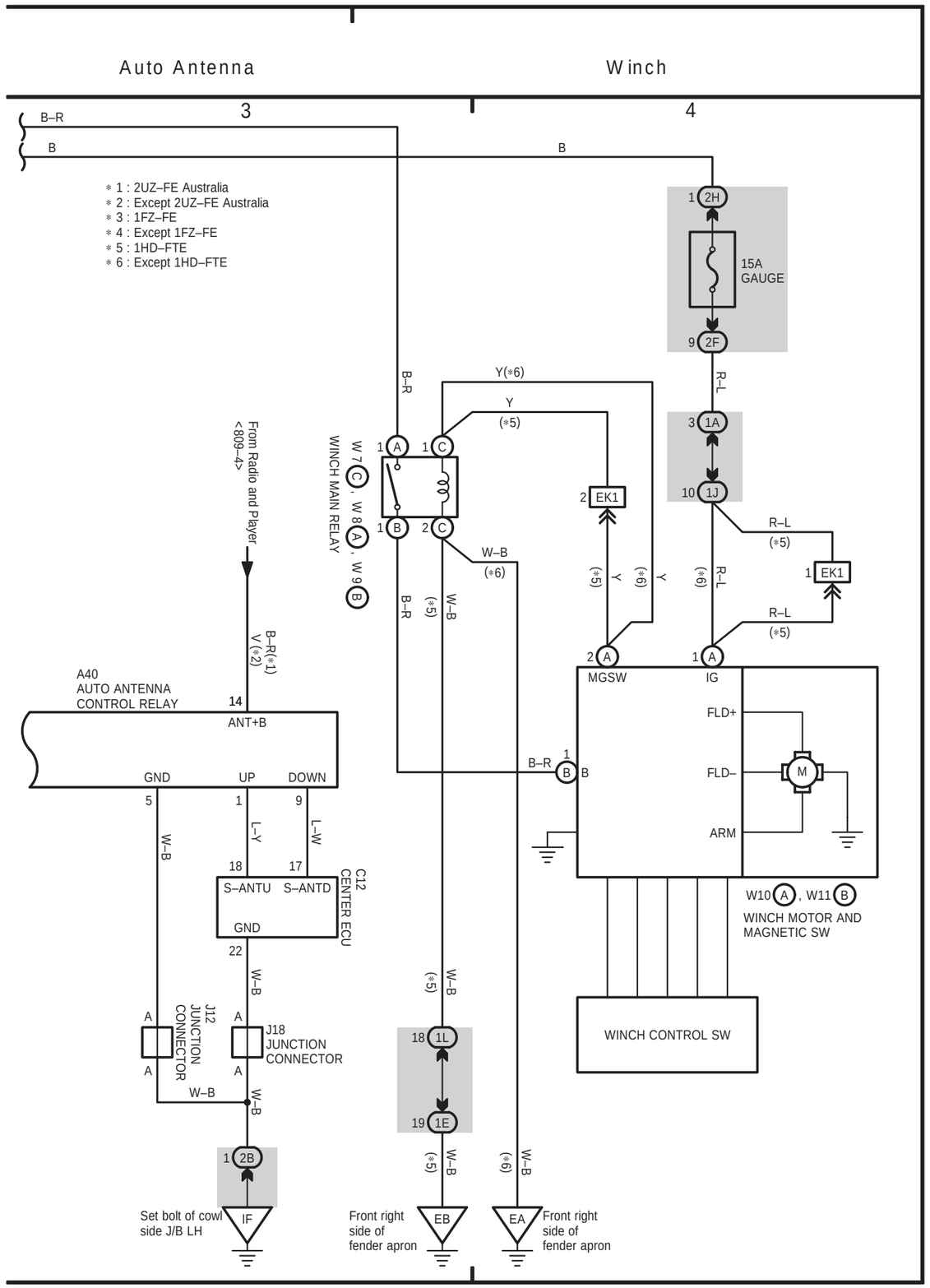
Auto Antenna
Winch
3
4
B–R
B
* 1 : 2UZ–FE Australia
* 2 : Except 2UZ–FE Australia
* 3 : 1FZ–FE
* 4 : Except 1FZ–FE
* 5 : 1HD–FTE
* 6 : Except 1HD–FTE
2H
15A
GAUGE
2F
R–L
1A
1J
Y(*6)
Y
(*5)
(*6)
W–B
EK1
W 7 C , W 8 A , W 9 B
WINCH MAIN RELAY
From Radio and Player
<809–4>
B–R(*1)
V (*2)
A40
AUTO ANTENNA
CONTROL RELAY
ANT+B
GND
UP
DOWN
L–Y
L–W
C12
CENTER ECU
S–ANTU
S–ANTD
J12
JUNCTION
CONNECTOR
J18
JUNCTION
CONNECTOR
2B
IF
Set bolt of cowl
side J/B LH
MGSW
IG
FLD+
FLD–
ARM
M
W10 A , W11 B
WINCH MOTOR AND
MAGNETIC SW
WINCH CONTROL SW
1L
1E
Front right
side of
fender apron
EB
EA





RHD

RHD