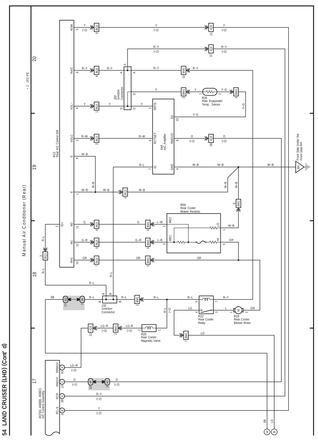
54 LAND CRUISER (LHD) (Cont' d)
Manual Air Conditioner (Rear)
Rear Evaporator Temp. Sensor
Rear Blower Motor
Rear Blower Resistor
Rear Blower Relay
Rear Blower Motor
Rear Blower Resistor
Rear Blower Relay
Rear Blower Motor
Rear Blower Relay
Rear Blower Motor
Rear Blower Relay
Rear Blower Mot