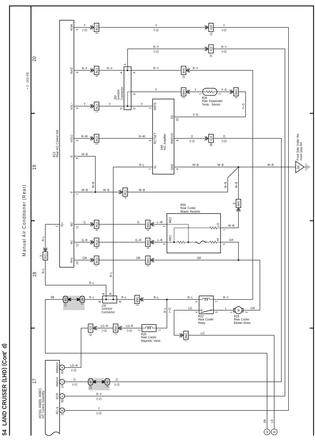
54 LAND CRUISER (LHD) (Cont d)
Manual Air Conditioner (Rear)
Rear Heater Blower Motor
Rear Heater Blower Resistor
Rear Heater Blower Motor Thermo
Rear Heater Temp. Sensor
Rear Heater Mode Motor
Rear Heater Mode Motor Thermo
Rear Heater Mode Motor Thermo
Rear Heater Mode Motor Thermo