(Cont. next page)

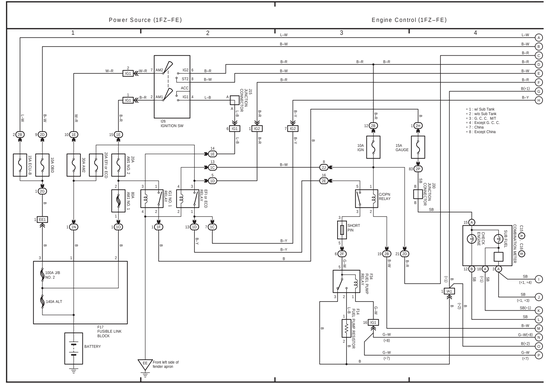
Power Source (1FZ–FE)
Engine Control (1FZ–FE)
1
2
3
4
*1 : w/ Sub Tank
*2 : w/o Sub Tank
*3 : G. C. C. MT
*4 : Except G. C. C.
*7 : China
*8 : Except China
C1 IGNITION SW
ECU-IG NO.1 FUSE 10A
ECU-B NO.2 FUSE 10A
ECU-B NO.1 FUSE 10A
ECU-IG NO.2 FUSE 7.5A
EFI NO.1 FUSE 15A
EFI NO.2 FUSE 15A
ENGINE ROOM R/B NO.1
ENGINE ROOM R/B NO.2
20A IGN FUSE
15A GAUGE FUSE
IGN RELAY
ENGINE ROOM R/B NO.3
SHORT PIN
STARTER RELAY
STARTER MOTOR
ALTERNATOR
GEN. WARNING LAMP
GEN. WARNING LAMP
GEN. WARNING LAMP