(Cont. next page)

Power Source (1HD–FTE) | Engine Control (1HD–FTE)

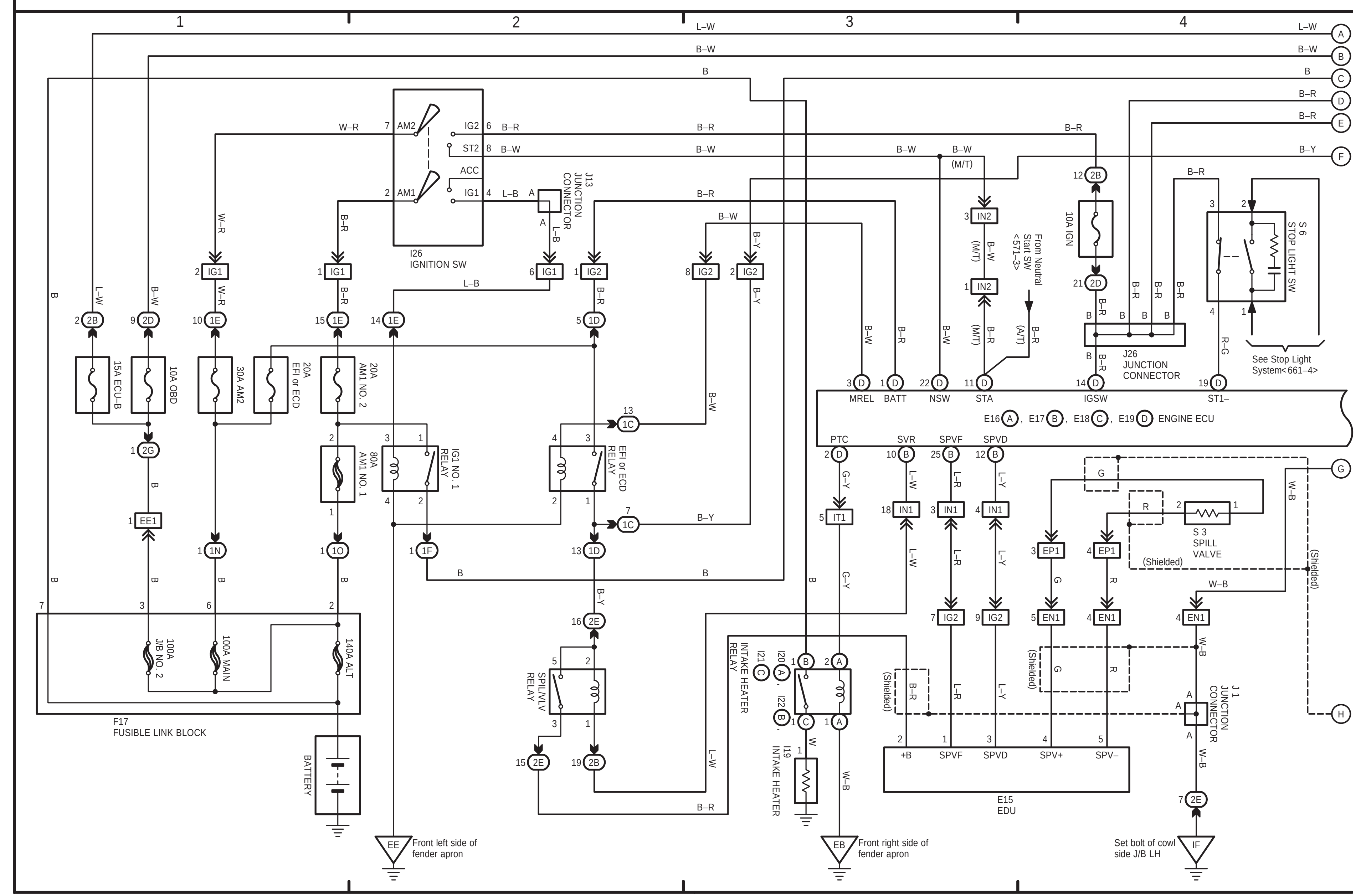

(Cont. next page)

Engine Control (1HD–FTE)

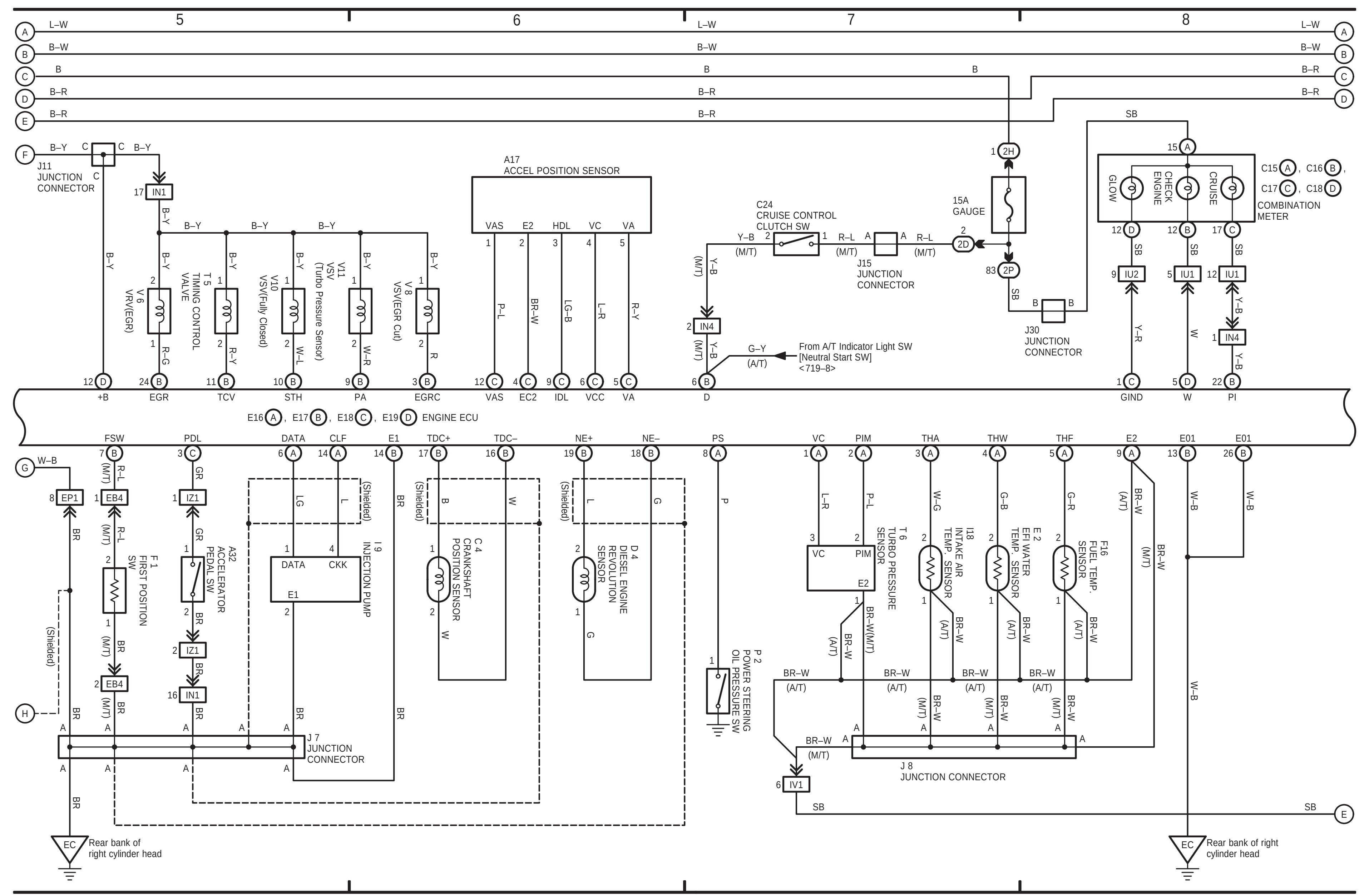

(Cont. next page)

Engine Control (1HD–FTE)

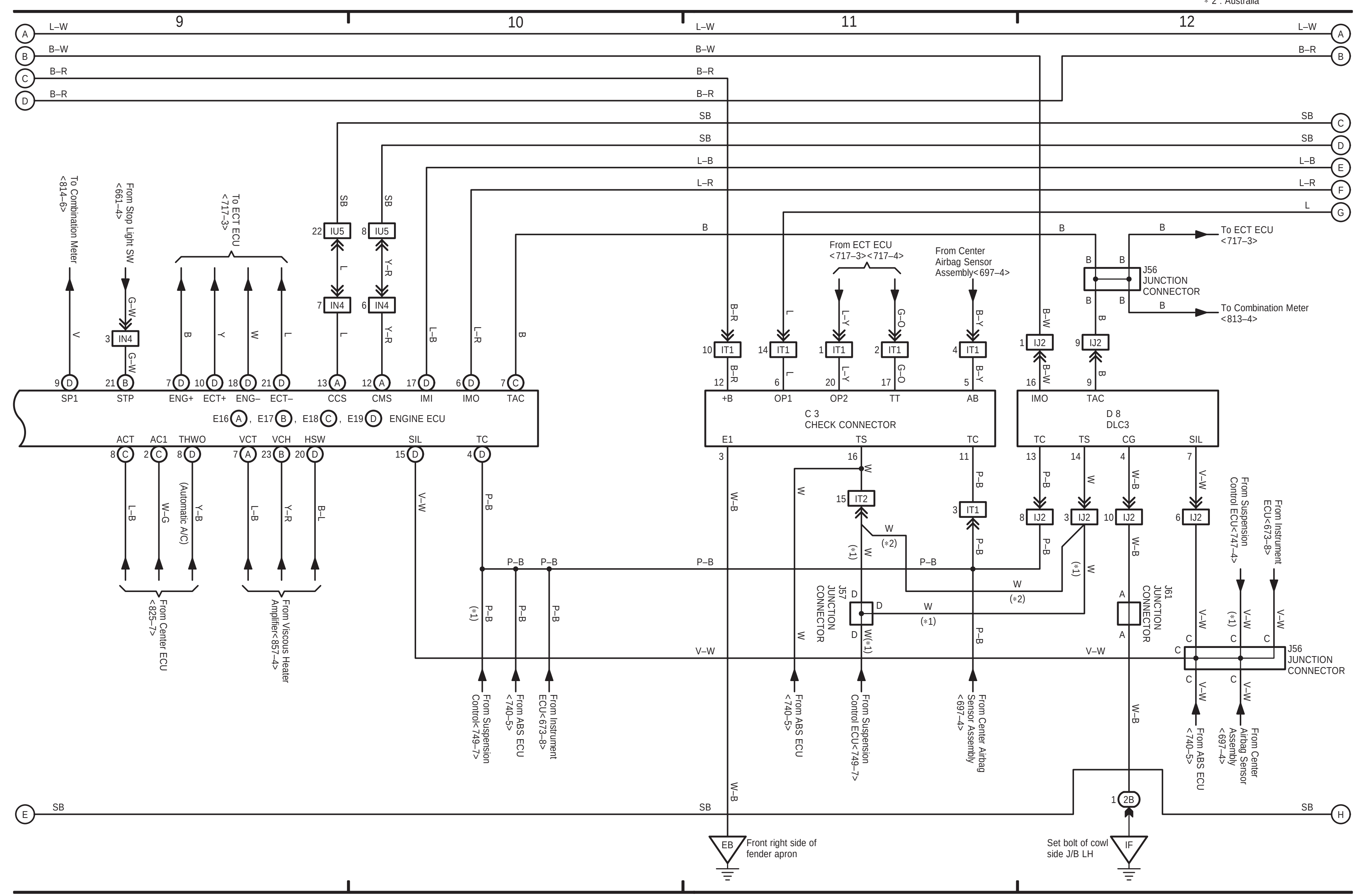
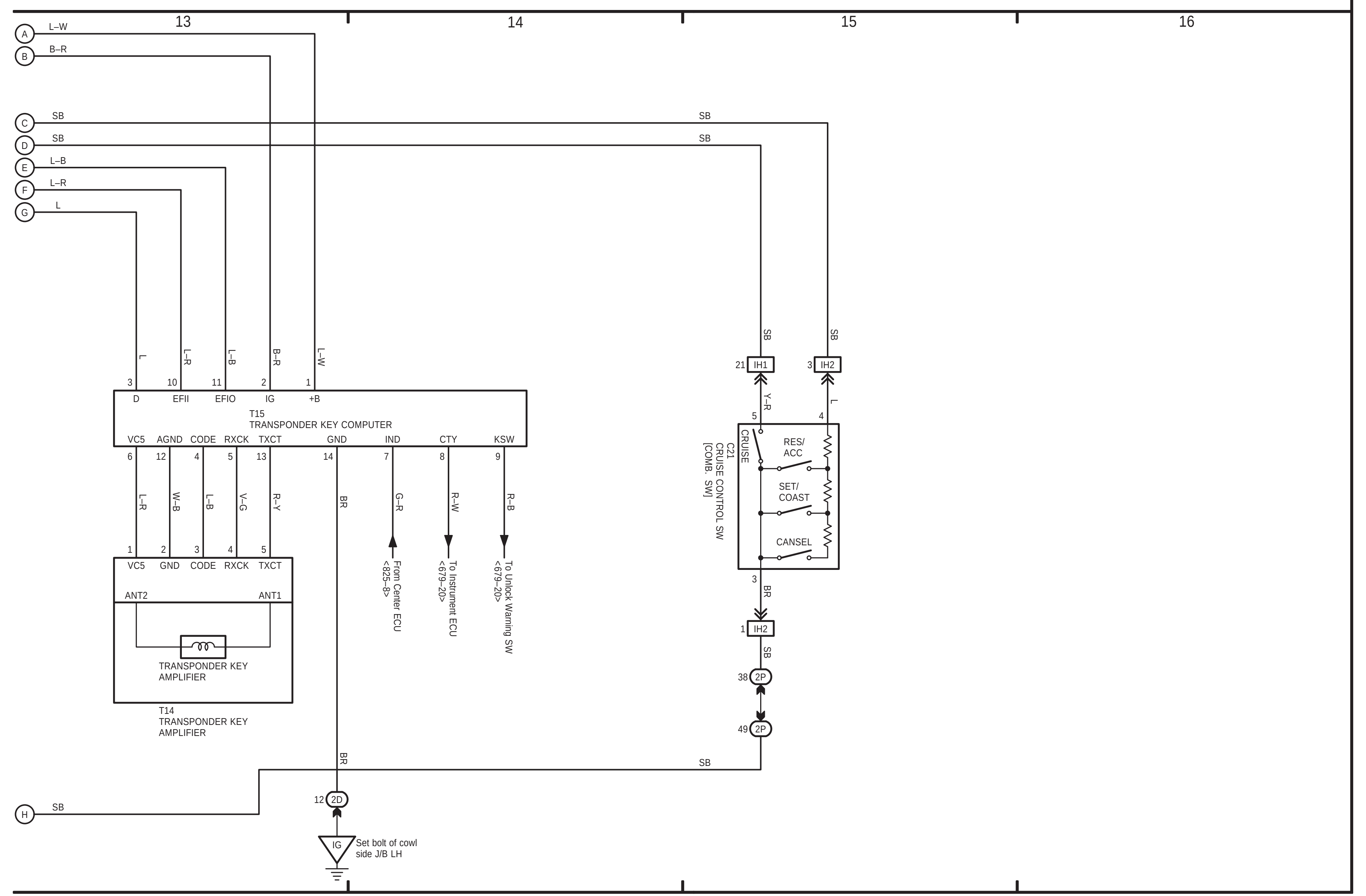
Engine Immobiliser System (1HD–FTE) | Cruise Control (1HD–FTE)