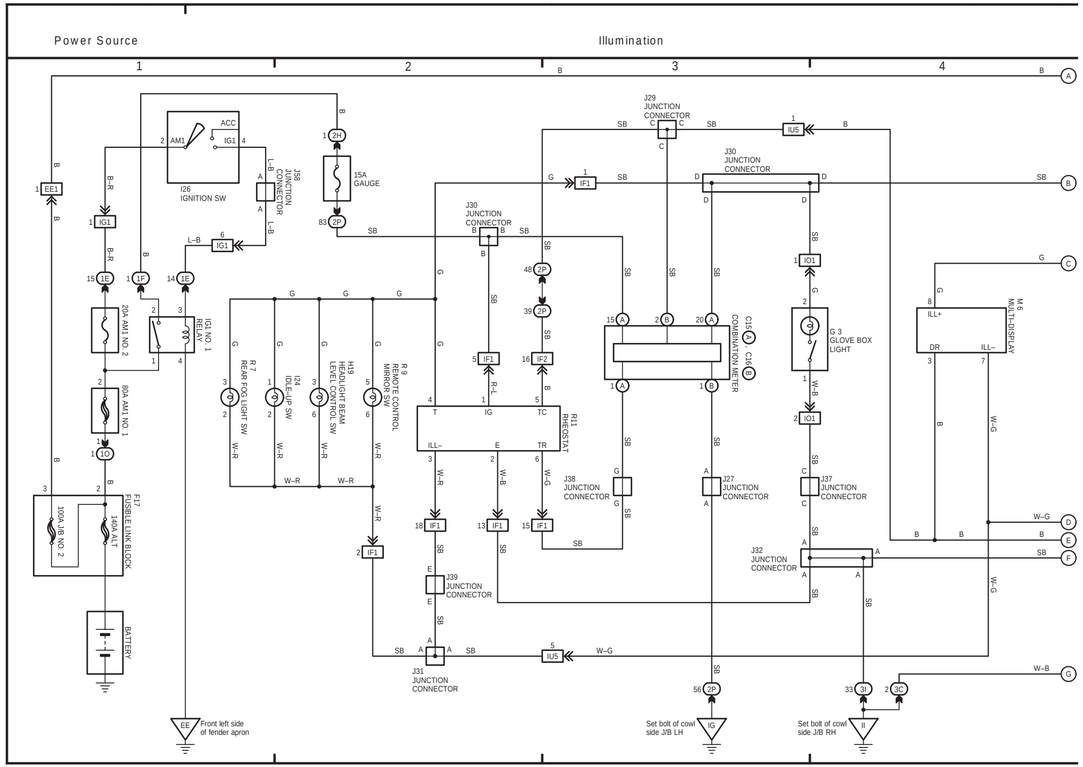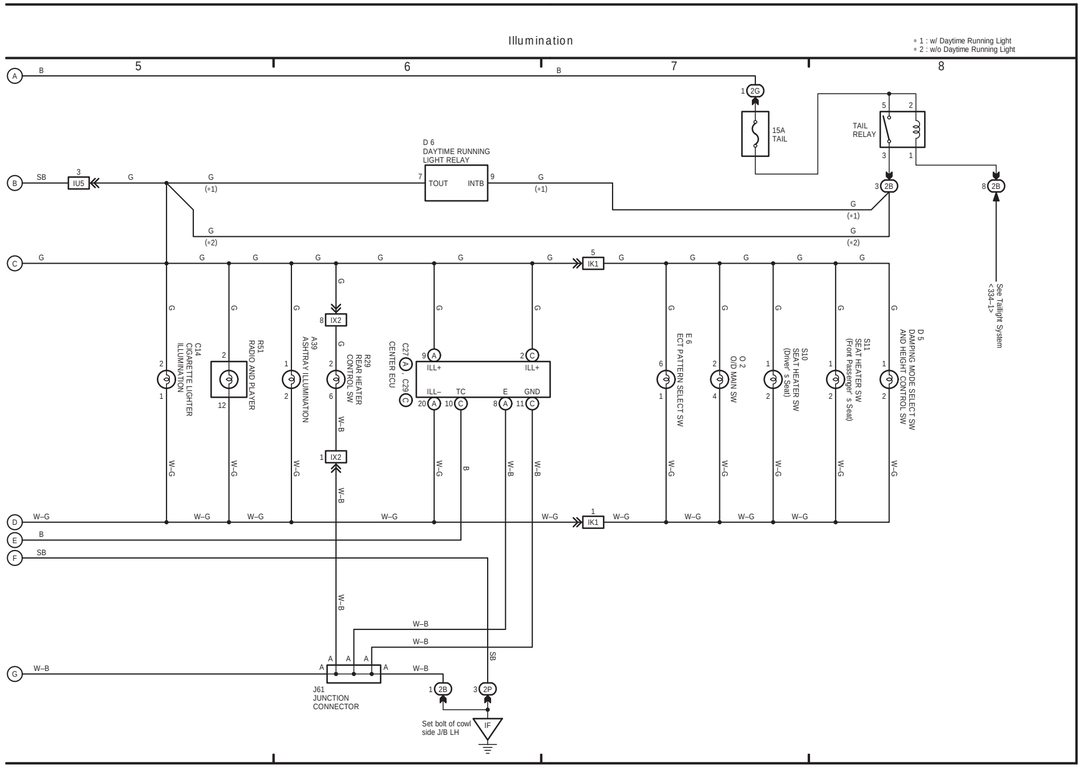(Cont. next page)