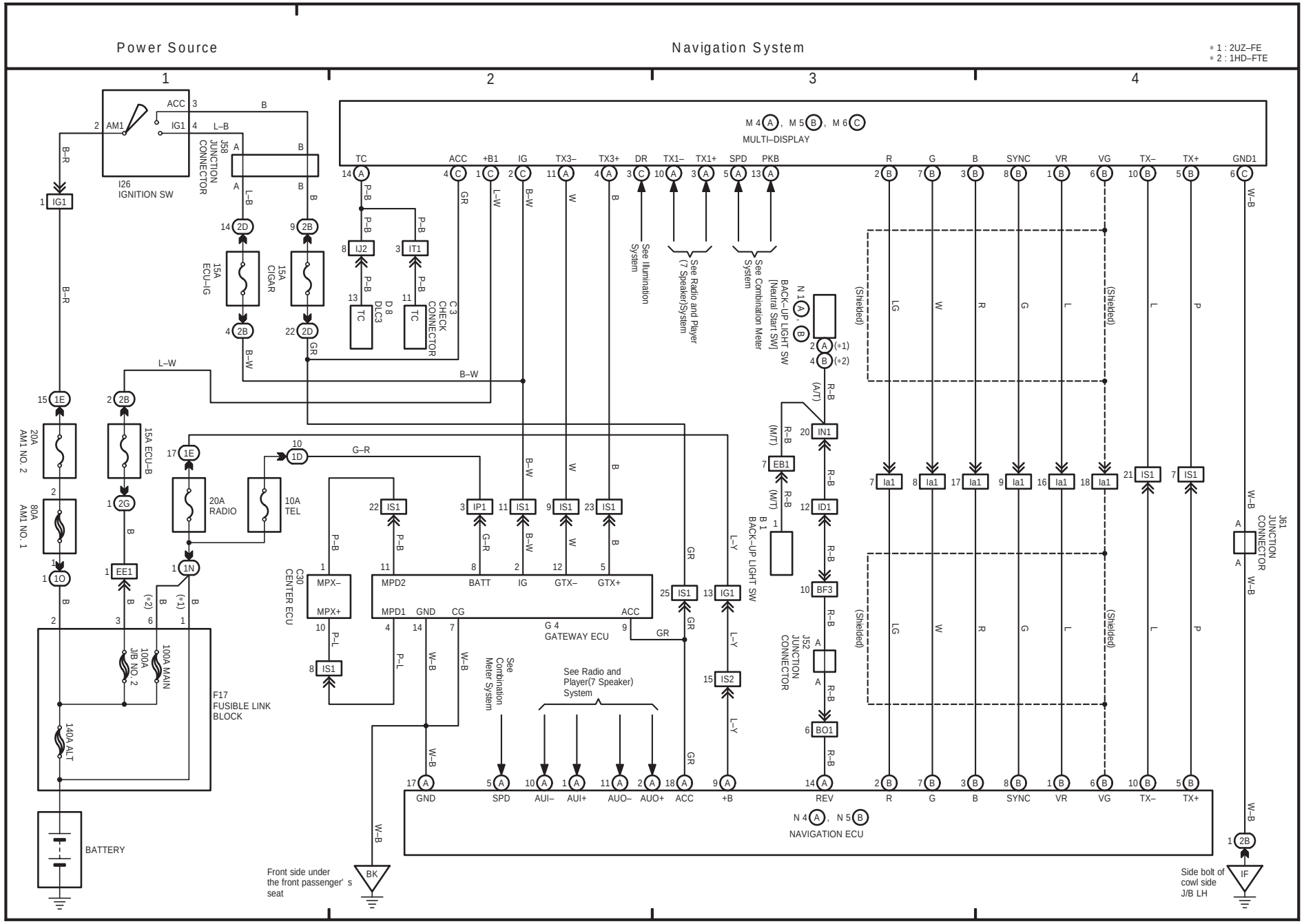LAND CRUISER (LHD)