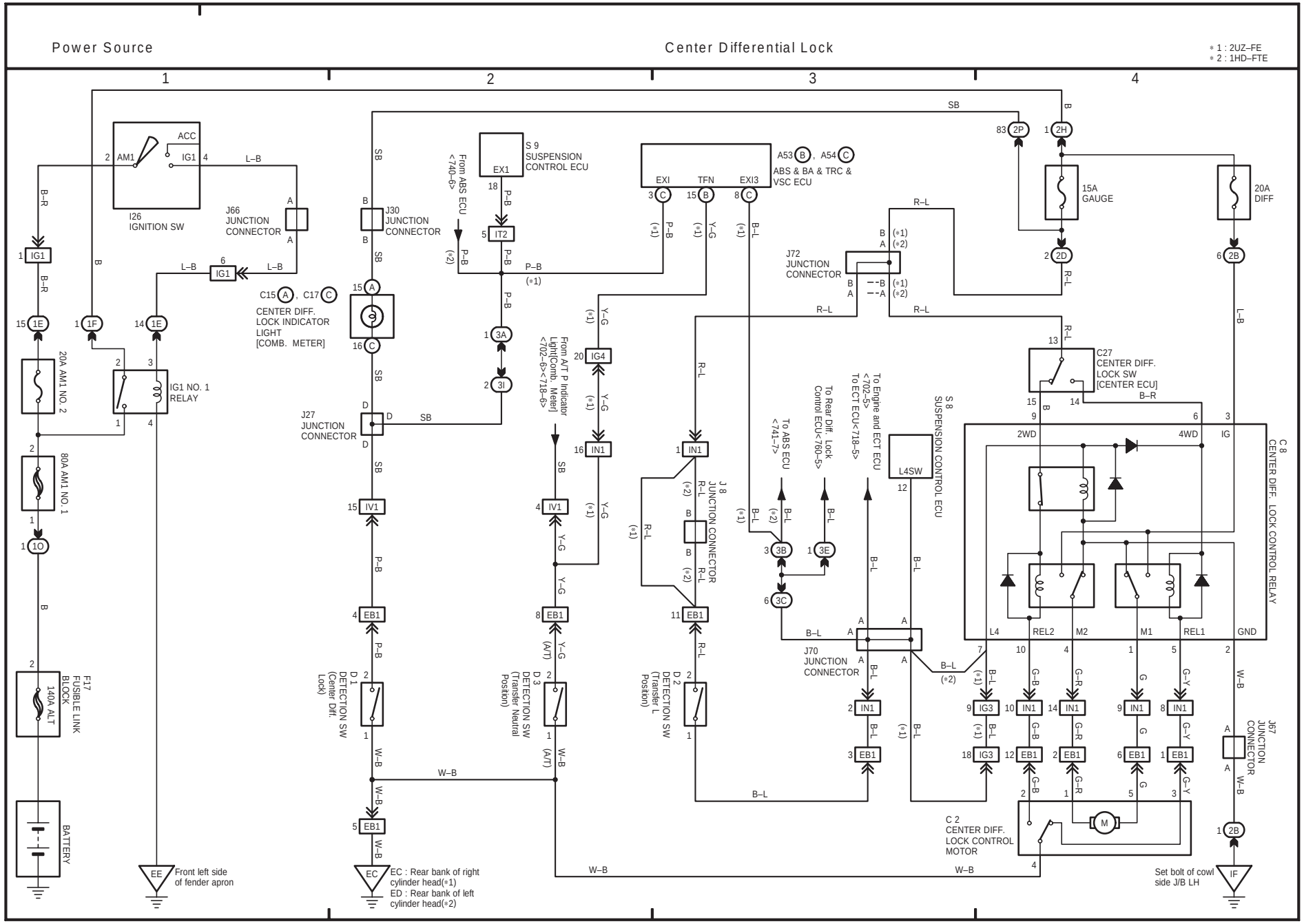LAND CRUISER (RHD)