AC1SM–01

COMPONENTS

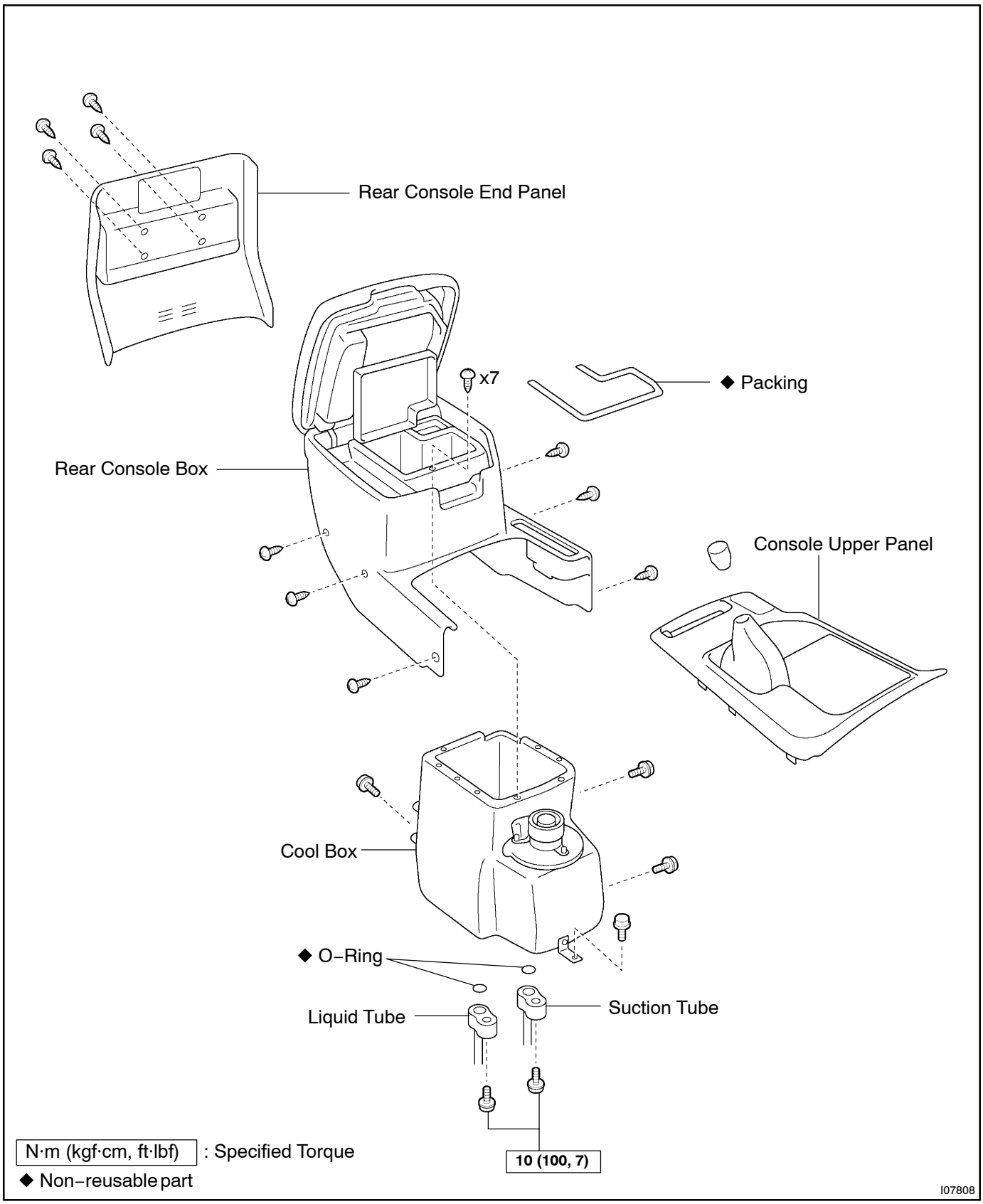

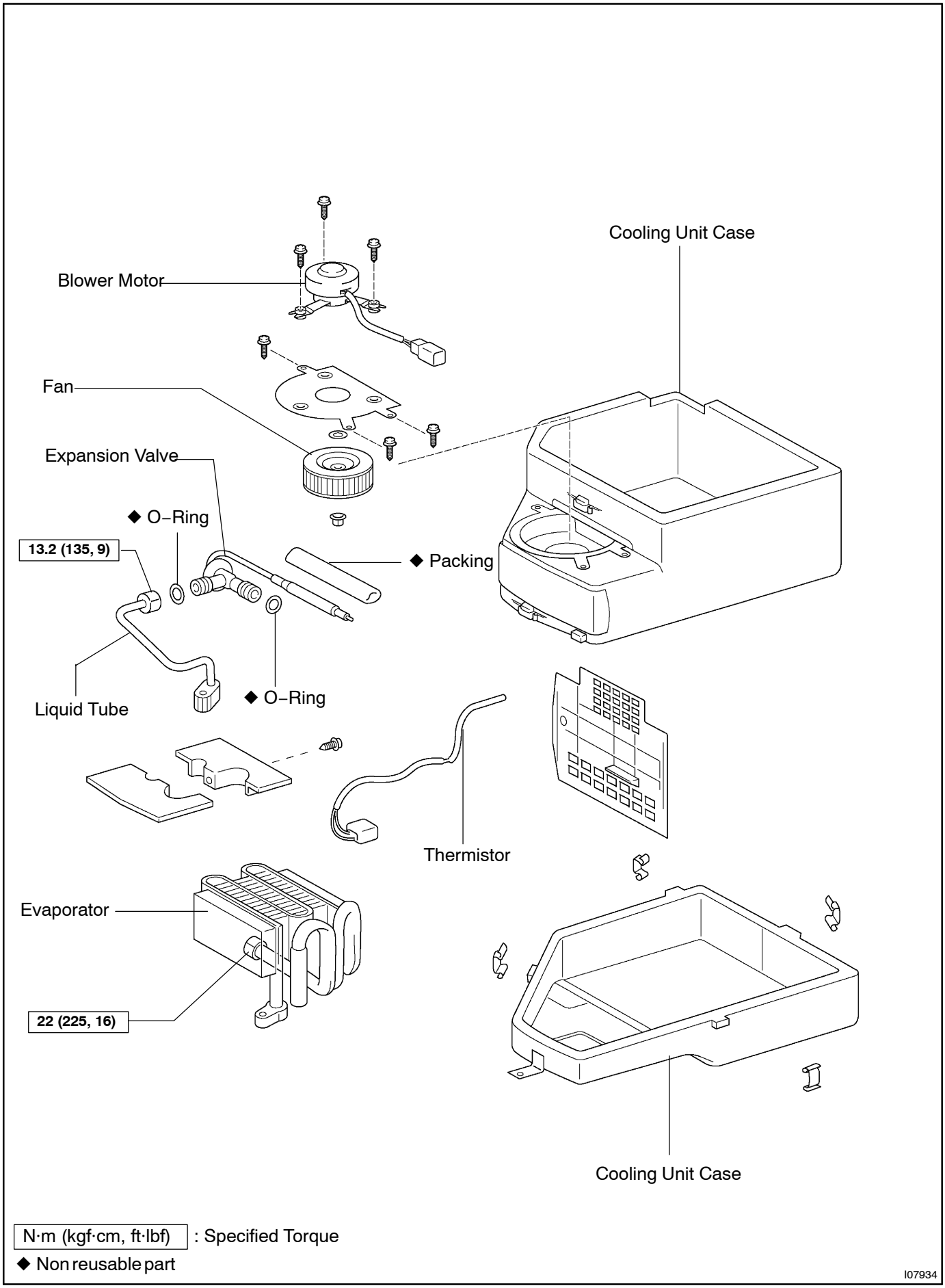
Cooling Unit Case
Blower Motor
Fan
Expansion Valve
◆ O–Ring
13.2 (135, 9)
◆ Packing
Liquid Tube
◆ O–Ring
Thermistor
Evaporator
22 (225, 16)
Cooling Unit Case
N·m (kgf·cm, ft·lbf) : Specified Torque
◆ Non reusable part
I07934