QUARTER WINDOW GLASS (Swing Type)

BO1VA–01
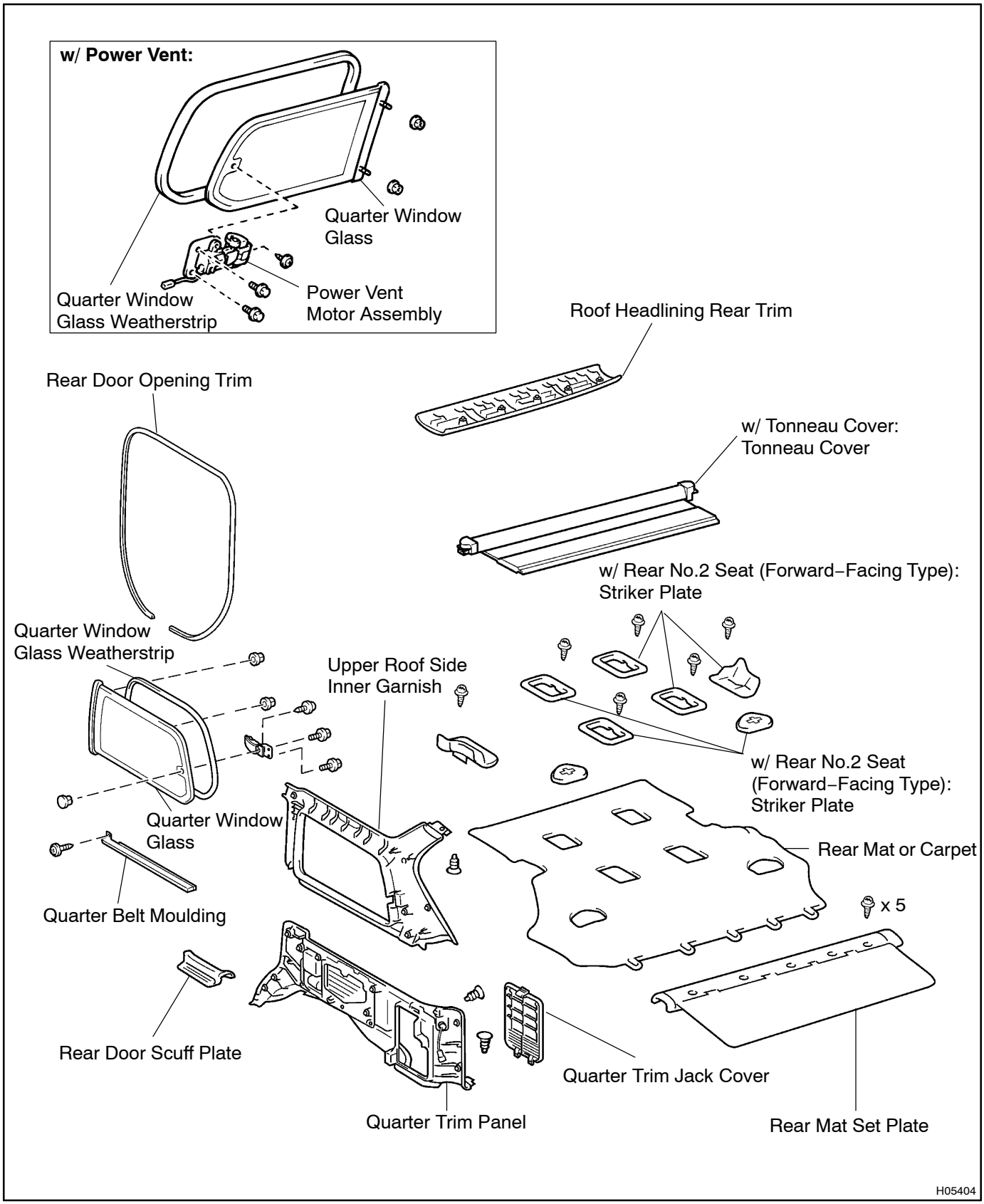
COMPONENTS