SUB FUEL TANK FORCING DRIVING RELAY (w/ Sub Fuel Tank)

COMPONENTS
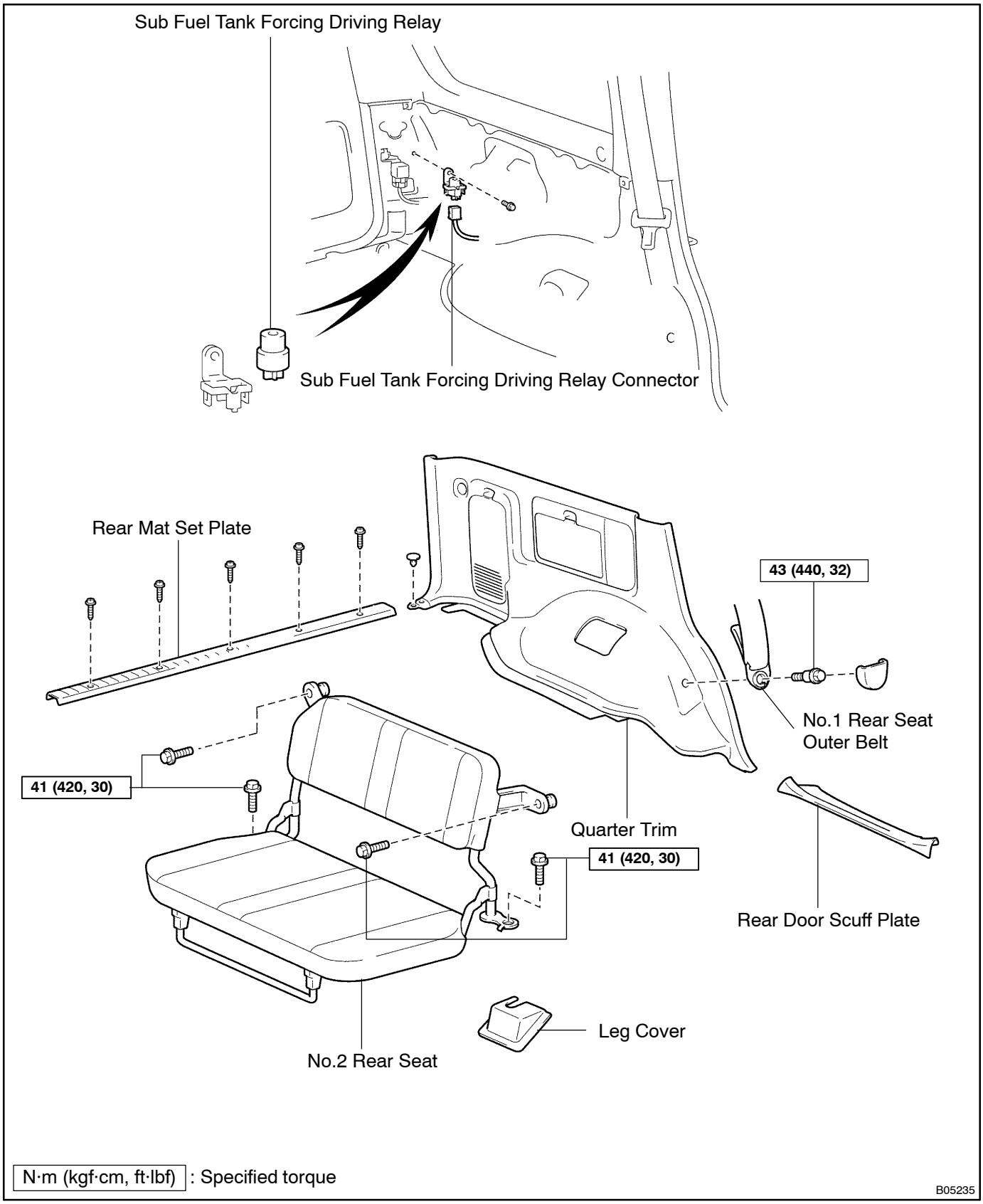
FI0E8–01