TC03T–01

COMPONENTS

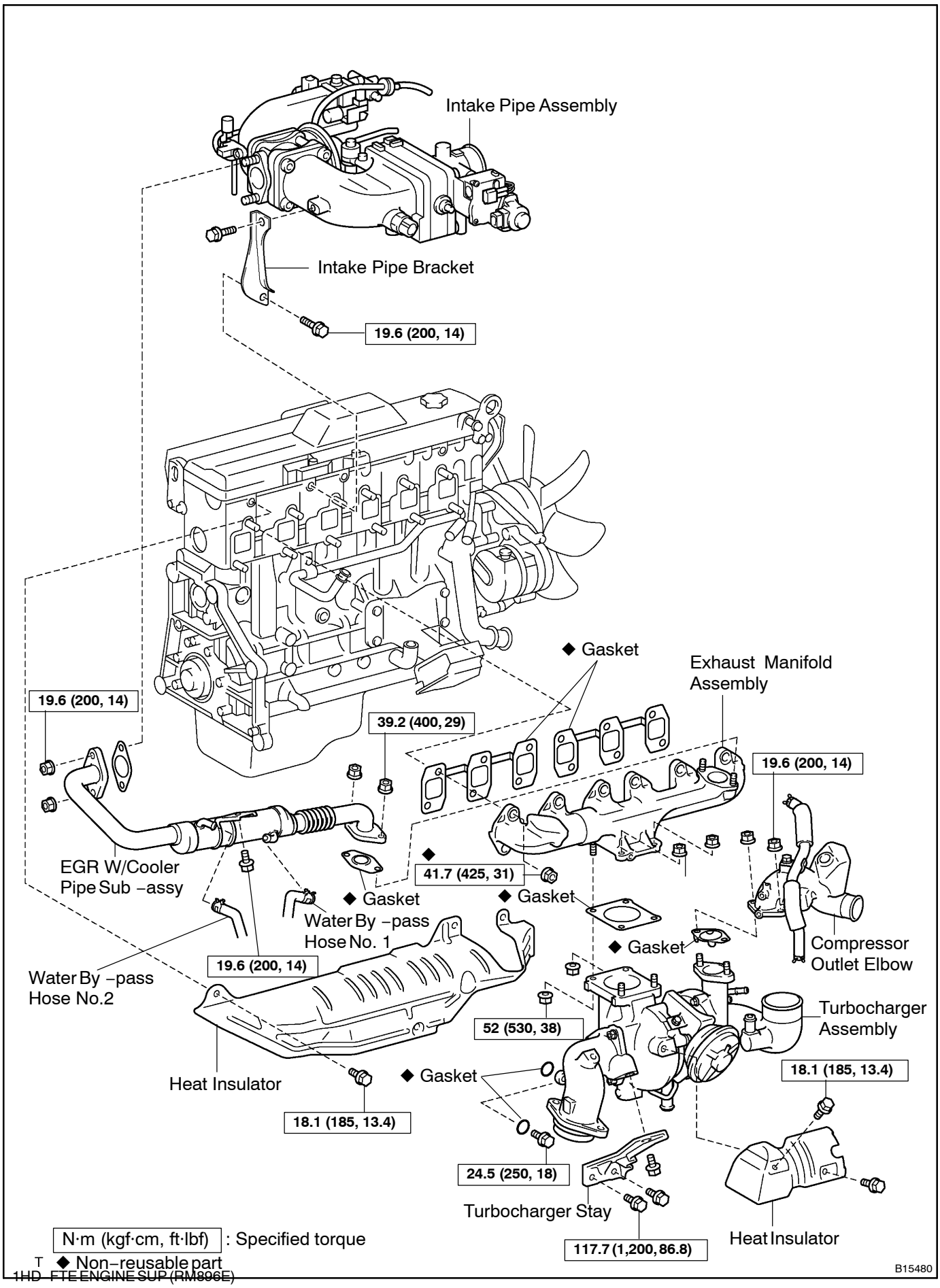

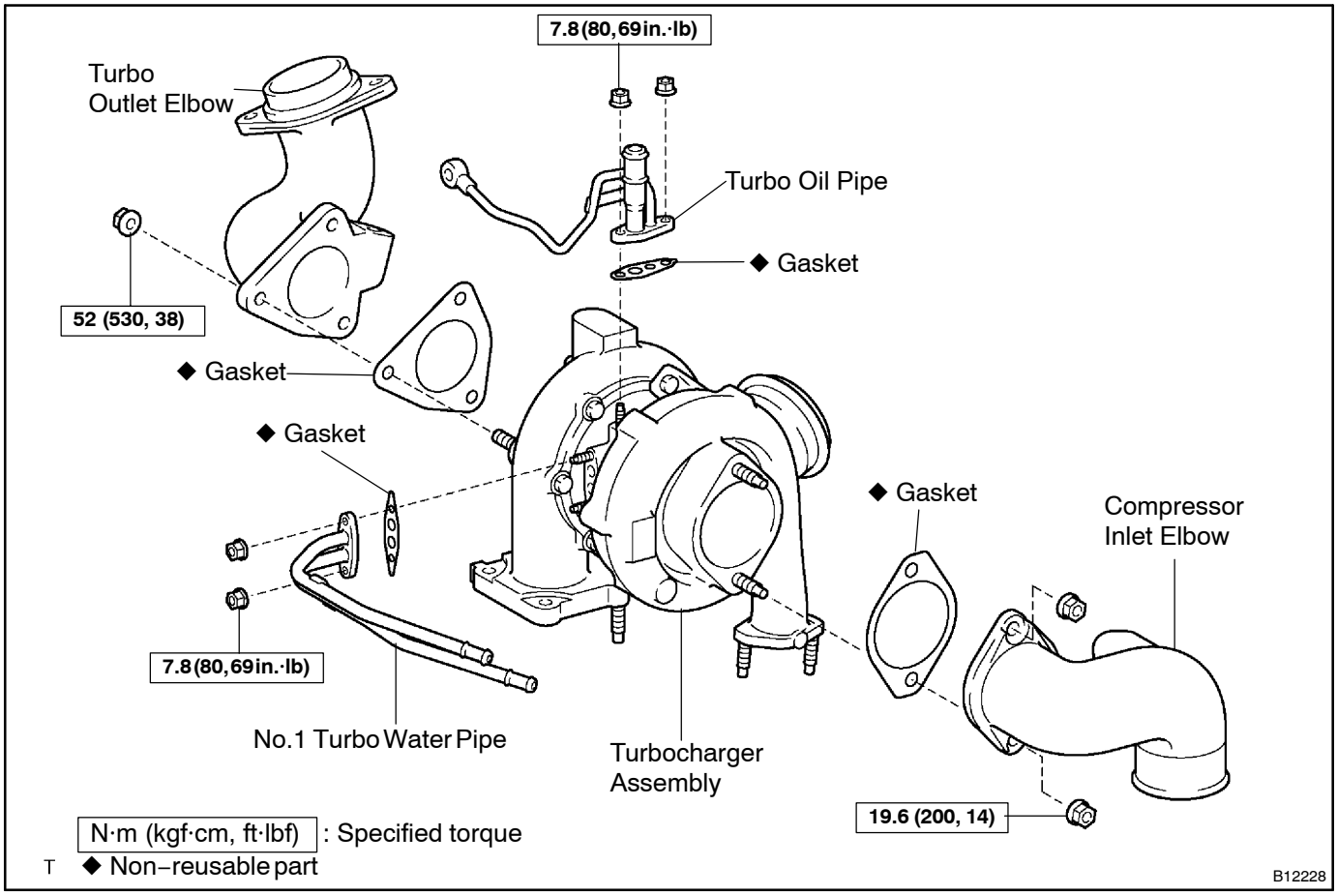
7.8 (80, 69 in.·lb)
Turbo
Outlet Elbow
Turbo Oil Pipe
◆ Gasket
52 (530, 38)
◆ Gasket
◆ Gasket
◆ Gasket
Compressor
Inlet Elbow
7.8 (80, 69 in.·lb)
No.1 Turbo Water Pipe
Turbocharger
Assembly
19.6 (200, 14)
N·m (kgf·cm, ft·lbf) : Specified torque
T ◆ Non–reusable part
B12228