FRONT SEAT (Separate Type: Power Adjuster)

BO1W2–02
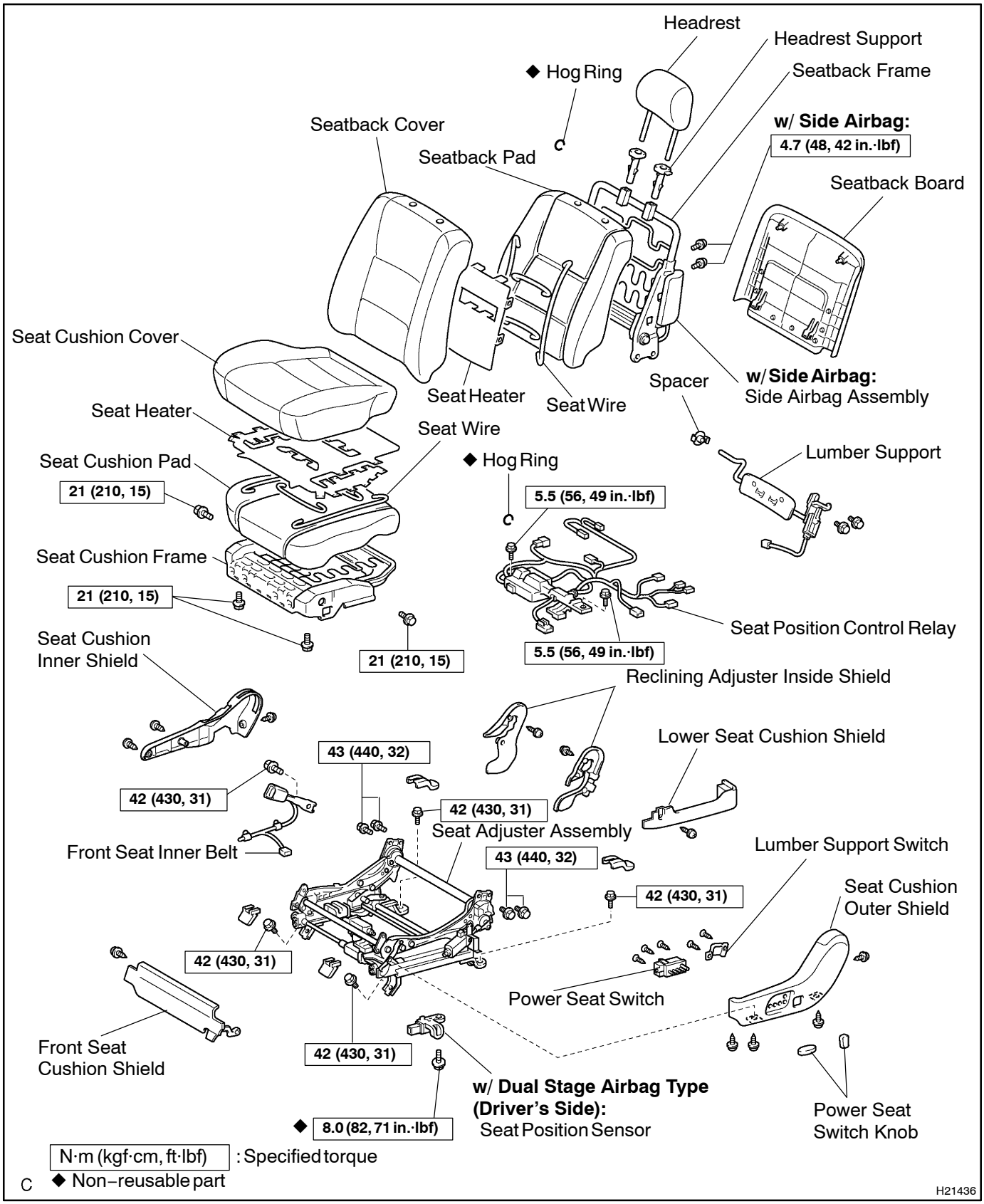
COMPONENTS