DI6X2–04
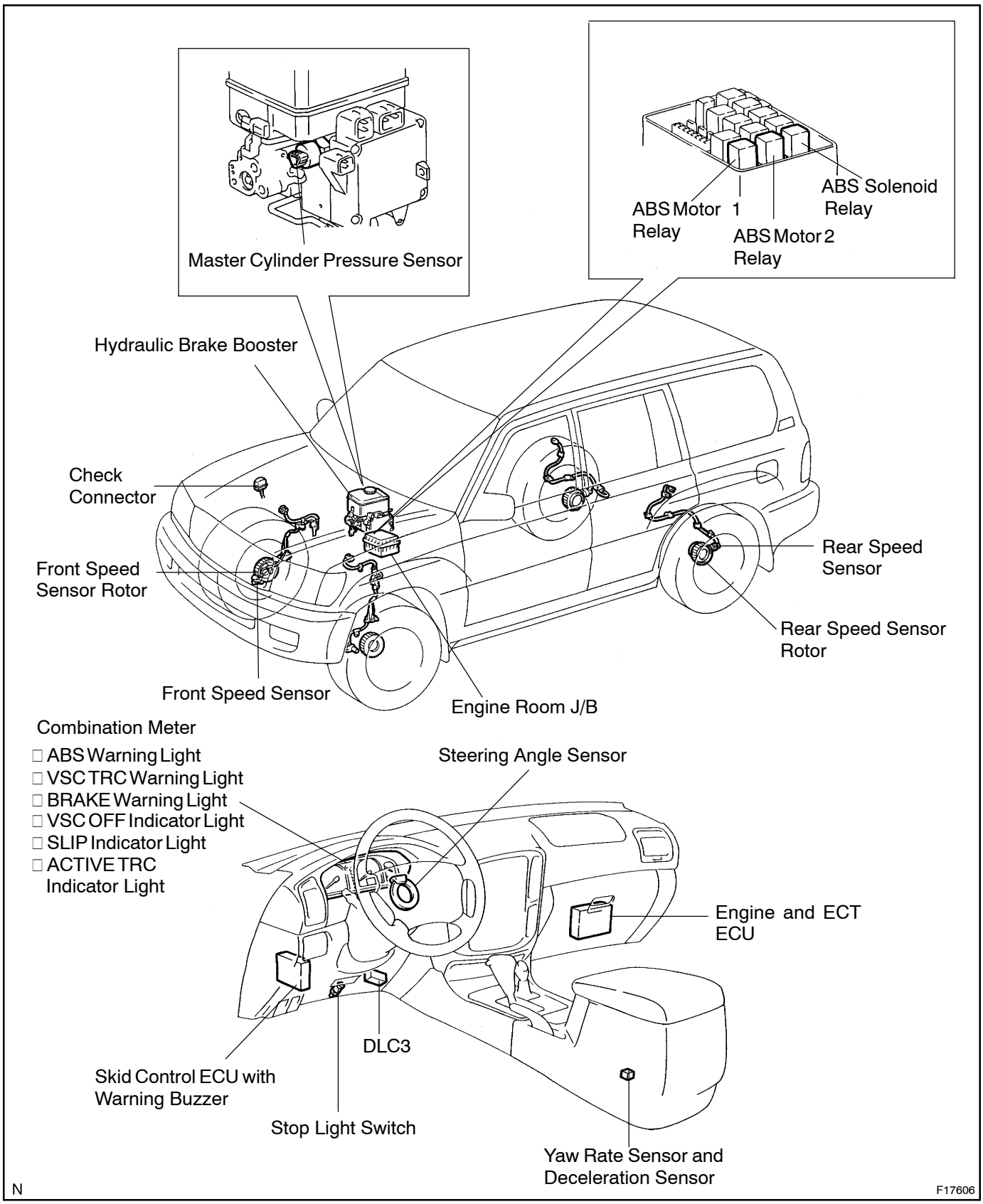
PARTS LOCATION